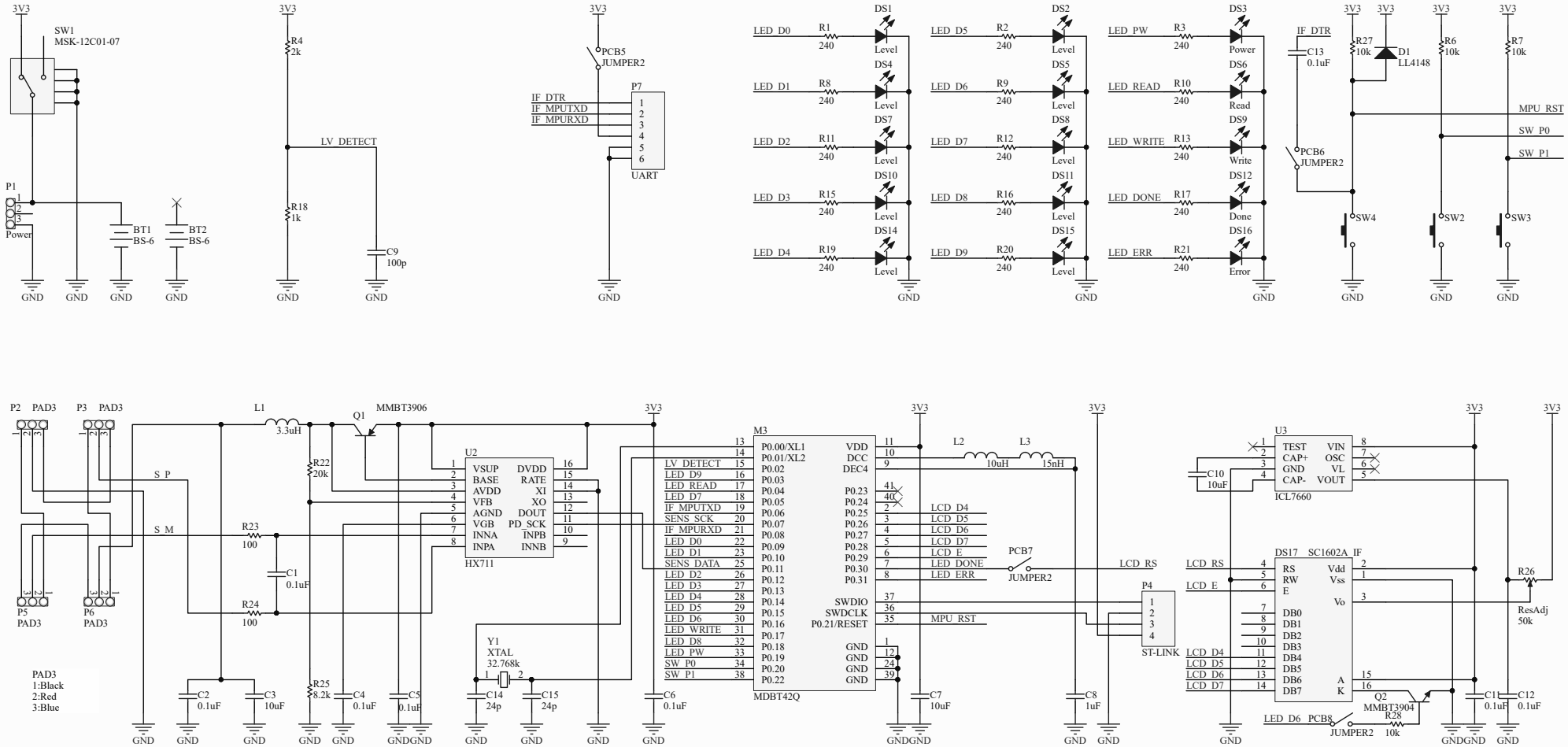
3V3
SW1
MSK-12C01-07
P1
Power
BT1
BS-6
BT2
BS-6
GND
R4
2k
LV_DETECT
R18
1k
C9
100p
PCB5
JUMPER2
P7
IF_DTR
IF_MPUTXD
IF_MPURXD
UART
LED_D0
R1
240
DS1
Level
LED_D1
R8
DS4
LED_D2
R11
DS7
LED_D3
R15
DS10
LED_D4
R19
DS14
LED_D5
R2
DS2
LED_D6
R9
DS5
LED_D7
R12
DS8
LED_D8
R16
DS11
LED_D9
R20
DS15
LED_PW
R3
DS3
Power
LED_READ
R10
DS6
Read
LED_WRITE
R13
DS9
Write
LED_DONE
R17
DS12
Done
LED_ERR
R21
DS16
Error
IF_DTR
C13
0.1uF
PCB6
JUMPER2
R27
10k
D1
LL4148
R6
10k
R7
10k
MPU_RST
SW_P0
SW_P1
SW4
SW2
SW3
P2 PAD3
P3 PAD3
L1
3.3uH
Q1
MMBT3906
S_P
S_M
R22
20k
R23
100
R24
100
C1
0.1uF
P5
PAD3
P6
PAD3
PAD3
1:Black
2:Red
3:Blue
U2
VSUP
BASE
AVDD
VFB
AGND
VGB
INNA
INPA
DVDD
RATE
XI
XO
DOUT
PD_SCK
INPB
INNB
HX711
C2
0.1uF
C3
10uF
R25
8.2k
C4
0.1uF
C5
0.1uF
Y1
XTAL
32.768k
C14
24p
C15
24p
C6
0.1uF
M3
P0.00/XL1
P0.01/XL2
P0.02
P0.03
P0.04
P0.05
P0.06
P0.07
P0.08
P0.09
P0.10
P0.11
P0.12
P0.13
P0.14
P0.15
P0.16
P0.17
P0.18
P0.19
P0.20
P0.22
P0.23
P0.24
P0.25
P0.26
P0.27
P0.28
P0.29
P0.30
P0.31
SWDIO
SWDCLK
P0.21/RESET
VDD
DCC
DEC4
GND
MDBT42Q
LV_DETECT
LED_D9
LED_READ
LED_D7
IF_MPUTXD
SENS_SCK
IF_MPURXD
LED_D0
LED_D1
SENS_DATA
LED_D2
LED_D3
LED_D4
LED_D5
LED_D6
LED_WRITE
LED_D8
LED_PW
SW_P0
SW_P1
LCD_D4
LCD_D5
LCD_D6
LCD_D7
LCD_E
LED_DONE
LED_ERR
MPU_RST
L2
10uH
L3
15nH
PCB7
JUMPER2
C7
10uF
C8
1uF
LCD_RS
P4
ST-LINK
U3
TEST
CAP+
GND
CAP-
VIN
OSC
VL
VOUT
ICL7660
C10
10uF
DS17 SC1602A IF
RS
RW
E
DB0
DB1
DB2
DB3
DB4
DB5
DB6
DB7
Vdd
Vss
Vo
A
K
R26
ResAdj
50k
C11
0.1uF
C12
0.1uF
Q2
MMBT3904
R28
10k
LED_D6_PCB8
JUMPER2